李洲科技股份有限公司
TAIWAN OASIS TECHNOLOGY CO., LTD.

TO-3216BC-SD
Technical Data Sheet
Surface Mount Device LED

Part Number Designations

TO-□□□□ □ □ - □□ □

Luminous Intensity Code (mcd)

A -	0.1~2.2
B -	2.2~6.0
C -	6.0~17.0
D -	17.0~51.0
E -	51.0~146.0
F -	146.0~417.0
G -	417.0~917.0
H -	917.0~2015.0
K -	2015.0~3406.0
M -	3406.0~5756.0

Emitting Color Code

V -	405	Violet (GaN/SiC)
B -	470	Blue (InGaN/SiC)
P -	525	Pure Green (InGaN/SiC)
SG -	540	Green (InGaN/SiC)
G -	570	Green (GaP)
MG -	575	High Bright Green (AlGaInP)
Y -	585	Yellow (GaAsP/GaP)
MY -	590	High Bright Yellow (AlGaInP)
MA -	605	High Bright Amber (AlGaInP)
MO -	615	Super Bright Orange (AlGaInP)
ME -	623	Super Bright Orange (AlGaInP)
E -	630	Orange (GaAsP/GaP)
MR -	630	Ultra Bright Red (AlGaInP)
MRL-	640	Ultra Bright Red (AlGaInP)
K -	648	Hi-Orange (GaAlAs/GaAs)
H -	660	Hi-Red (GaAlAs/GaAs)
S -	660	Super-Red (GaAlAs/GaAs)
R -	700	Red (GaP)
MW -	X=0.29, Y=0.31	White (InGaN/SiC)

Lens Color

C -	Water Clear
D -	Color Diffused
Y -	Yellow Diffused
R -	Red Diffused
W -	White Diffused
T -	Color Transparent

Lens Type

A -	Dome
B -	Plane
S -	Side Emitting
T -	Tenuous

Package Dimension (Length and Width)

Taiwan Oasis

2003/7/17
REV.2

Features

- IC compatible.
- Compatible with automatic placement equipment.
- Compatible with infrared and vapor phase reflow solder process.
- Mono-color type.
- Package in 8mm tape on 7” diameter reel.

Luminous Intensity Group (Bin Code Range)

Code	Iv	Code	Iv	Code	Iv	Code	Iv	Code	Iv
A1	0.10~1.00	**C1**	6.28~8.16	**E1**	51.20~66.54	**G1**	417.55~542.80	**M1**	3406.00~4427.79
A2	1.01~1.30	**C2**	8.17~10.60	**E2**	66.55~86.50	**G2**	542.81~705.64	**M2**	4427.80~5756.13
A3	1.31~1.69	**C3**	10.61~13.79	**E3**	86.51~112.46	**G3**	705.65~917.33		
A4	1.70~2.20	**C4**	13.80~17.92	**E4**	112.47~146.19	**H1**	917.34~1192.53		
B1	2.21~2.86	**D1**	17.93~23.30	**F1**	146.20~190.05	**H2**	1192.54~1550.29		
B2	2.87~3.71	**D2**	23.31~30.29	**F2**	190.06~247.06	**H3**	1550.30~2015.38		
B3	3.72~4.83	**D3**	30.30~39.37	**F3**	247.06~321.18	**K1**	2015.39~2620.00		
B4	4.84~6.27	**D4**	39.38~51.19	**F4**	321.19~417.54	**K2**	2620.01~3405.99		

Note:The standard shipping format for serial types includes a lower or upper family group of 3 or 4 individual groups. Individual half groups are not available. No packing unit 1 tape ever contains more than one luminous intensity half group.

Package Dimensions

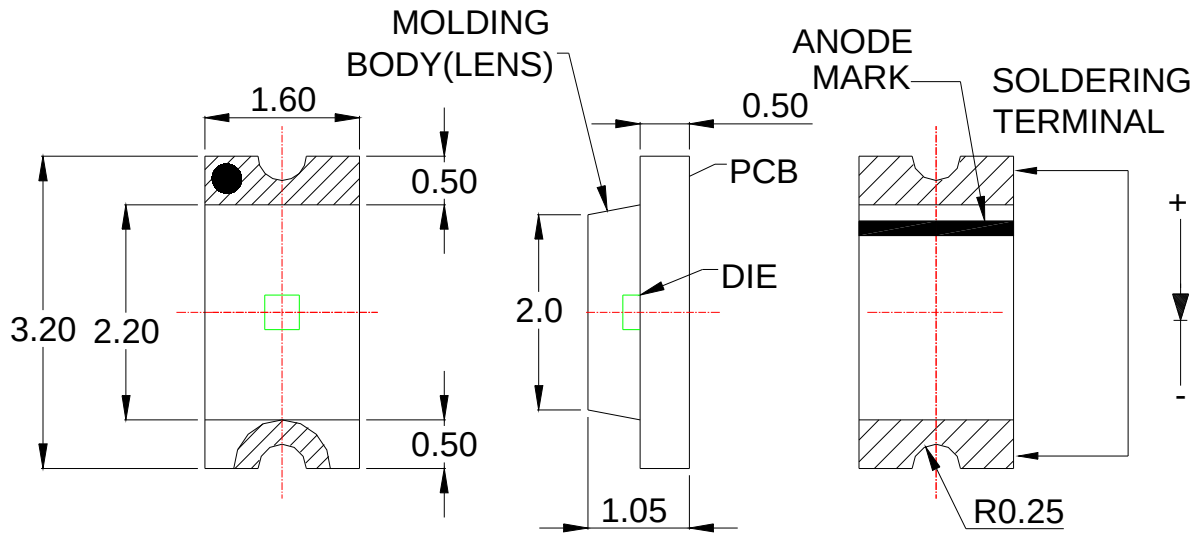

Note:

1. All dimensions are in millimeters.
2. Tolerance is ±0.1mm unless otherwise noted.

Absolute Maximum Ratings at T_A=25℃

Parameter	Maximum Rating	Unit
Peak Forward Current (1/10 Duty Cycle, 0.1ms Pulse Width)	80	mA
Continuous Forward Current	30	mA
Reverse Voltage	5	V
Operating Temperature Range	-25℃ to +85℃	
Storage Temperature Range	-30℃ to +100℃	
Lead Soldering Temperature [1.6mm (.063") From Body]	260℃ for 5 Seconds	

Reflow Soldering:

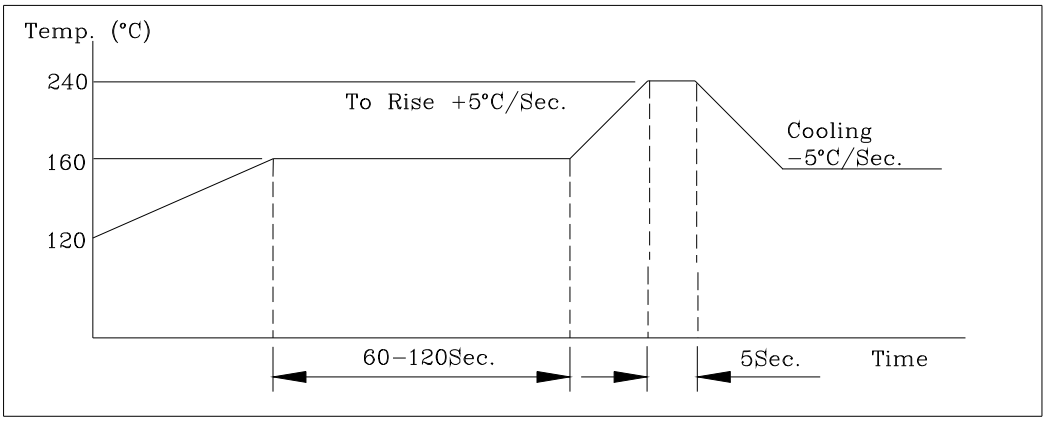

Electrical / Optical Characteristics at T_A=25℃

Parameter	Symbol	Min.	Typ.	Max.	Unit	Test Condition
Luminous Intensity	Iv	20	40		mcd	I_F=20mA
Viewing Angle	$2\theta_{1/2}$		140		deg	I_F=20mA
Dominant Wavelength	λ_d		660		nm	I_F=20mA
Spectral Line Half-Width	$\triangle\lambda$		20		nm	I_F=20mA
Power Dissipation	Pd			75	mW	
Forward Voltage	V_F	1.7	1.8	2.0	V	I_F=20mA
Reverse Current	I_R			20	μA	V_R=5V

Typical Electrical / Optical Characteristics Curves

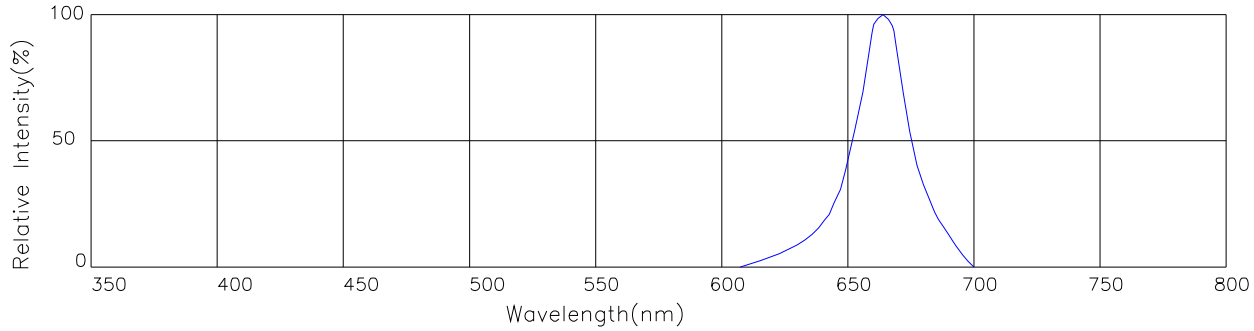

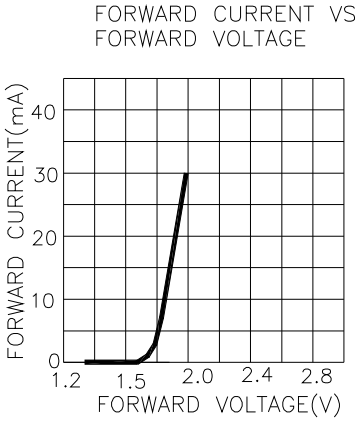

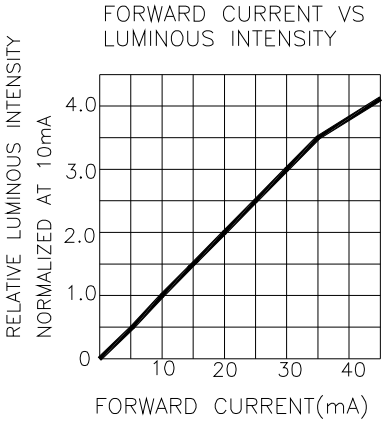

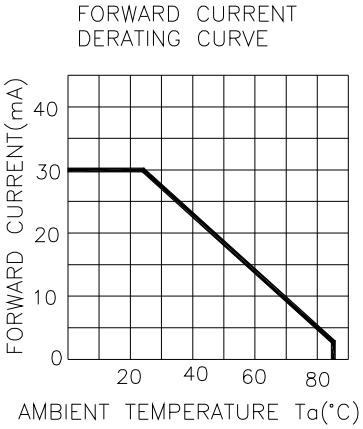

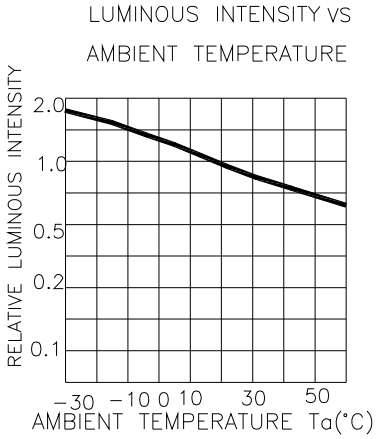

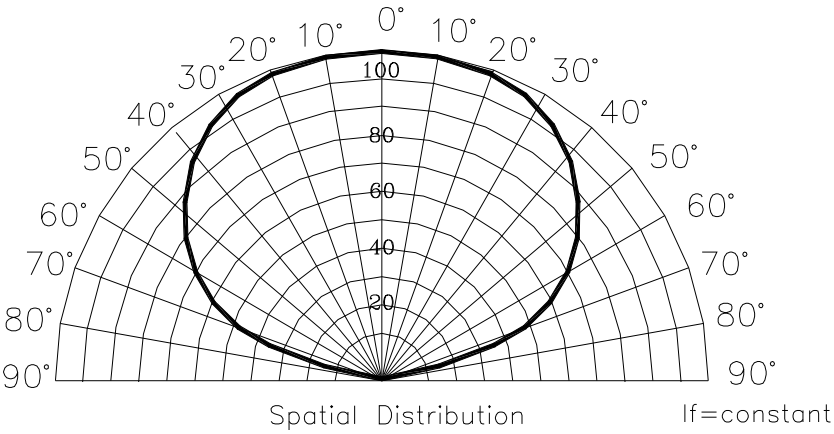

Cleaning

Do not use unspecified chemical liquid to clean LED they could harm the package. If clean is necessary, immerse the LED in ethyl alcohol or in isopropyl alcohol at normal temperature for less one minute. When other chemical solutions not specified are used, it may cause cracks or haze on the surface of the lens.

/Suggest Soldering Pad Dimensions (Units: mm)

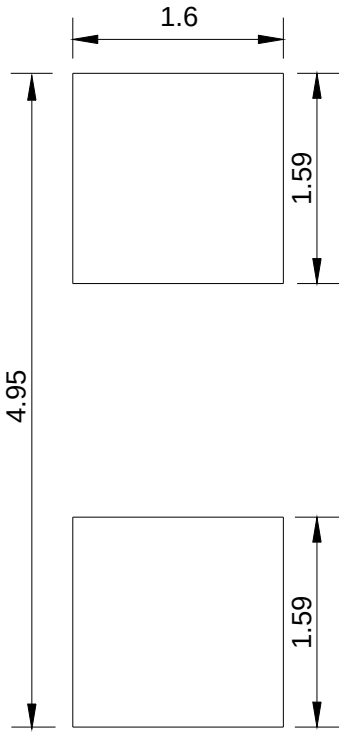

Package Dimensions Of Tape And Reel (Units: mm)

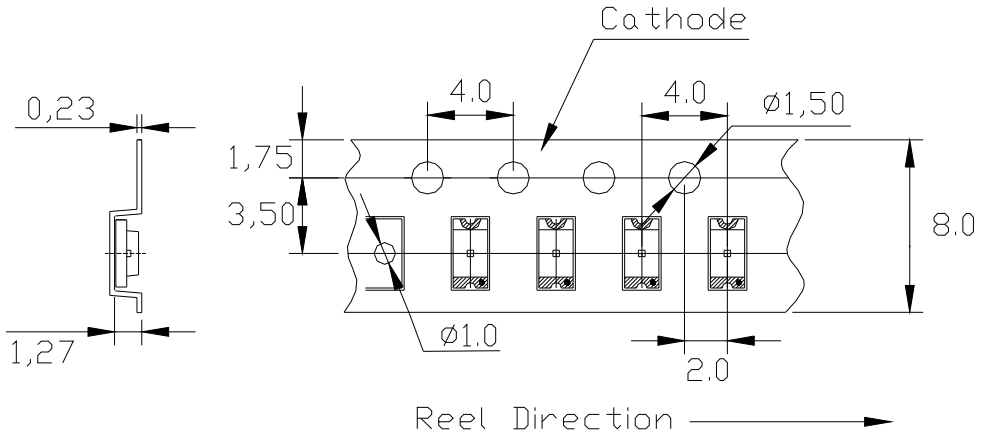
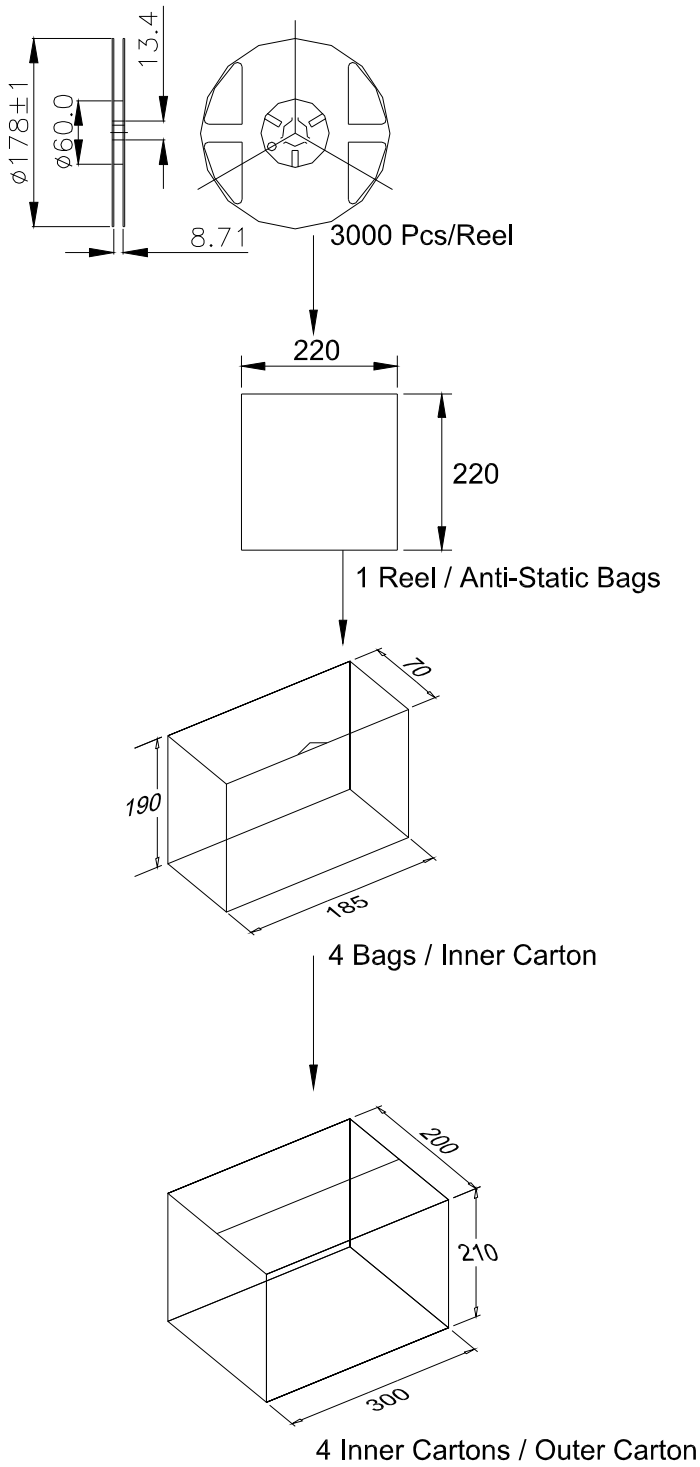
Package Dimensions Of Tape And Reel (Units: mm)