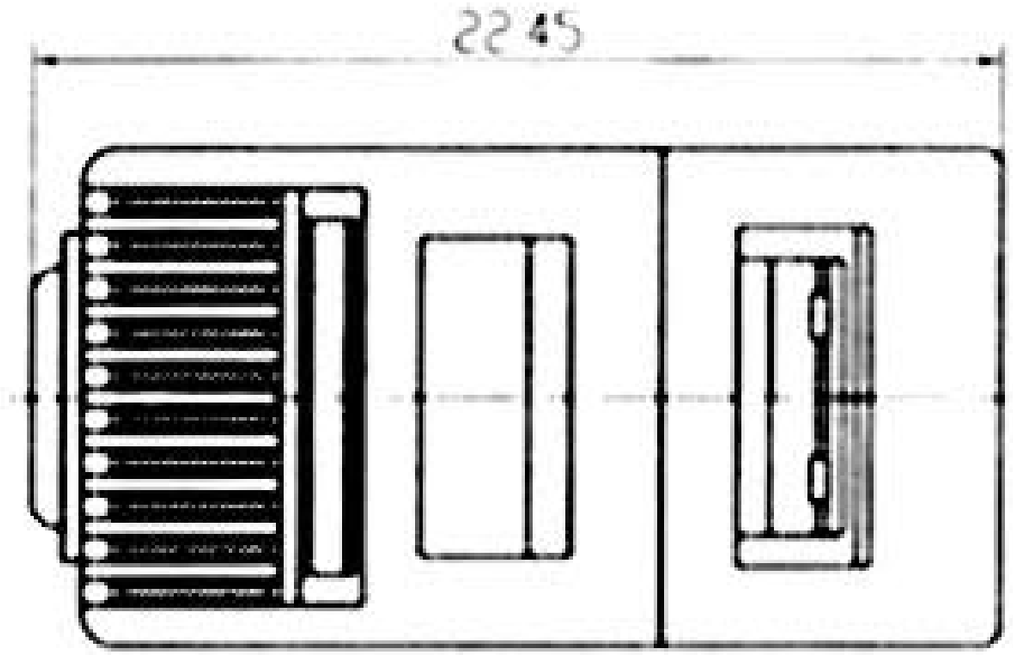
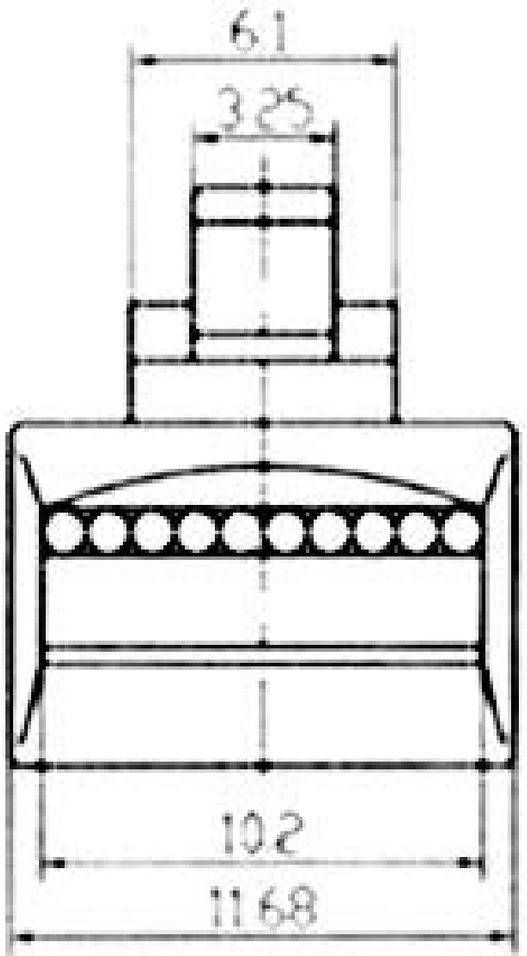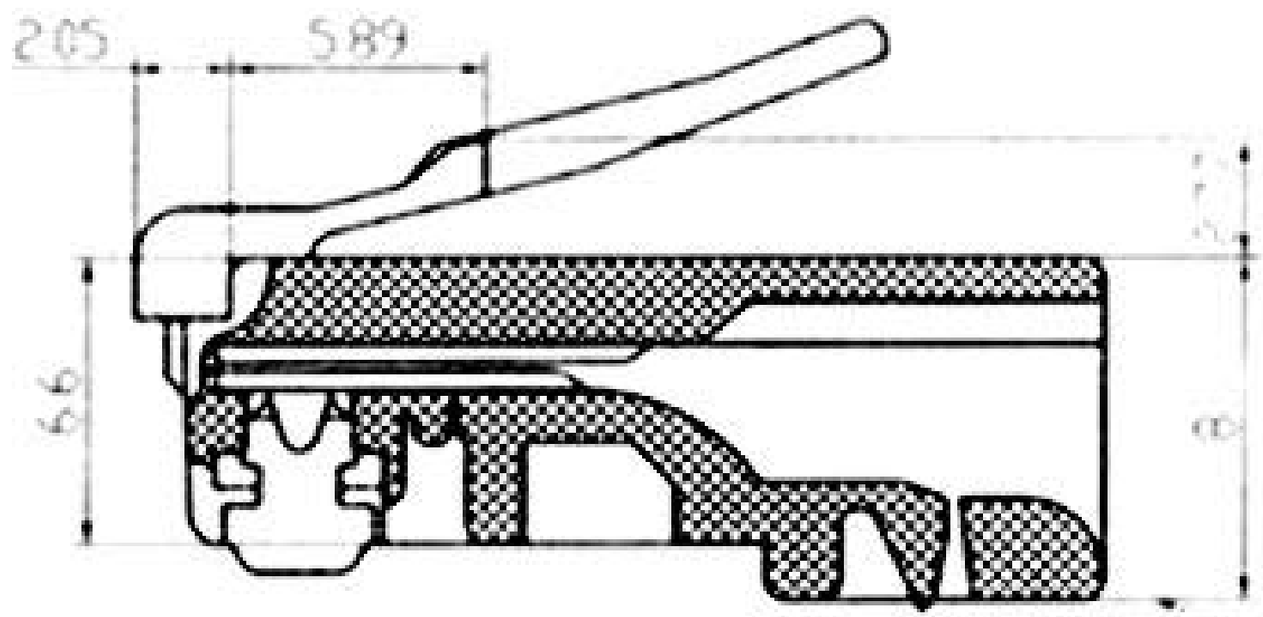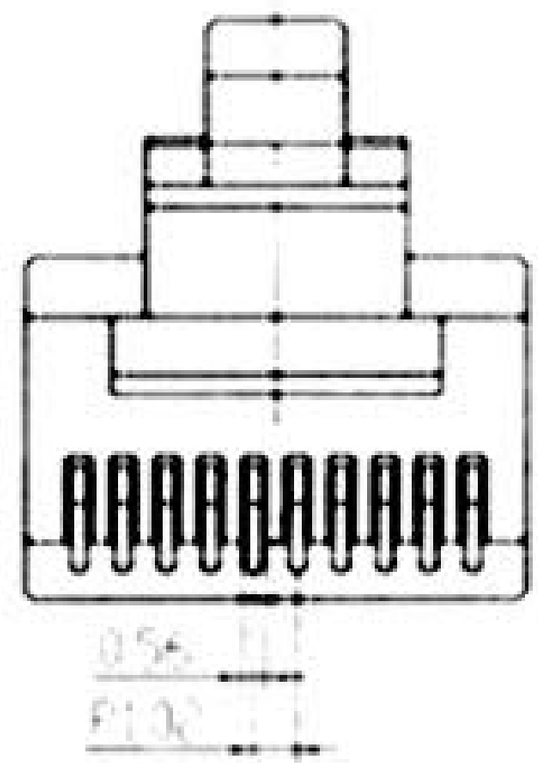
TOLERANCE ±0.1