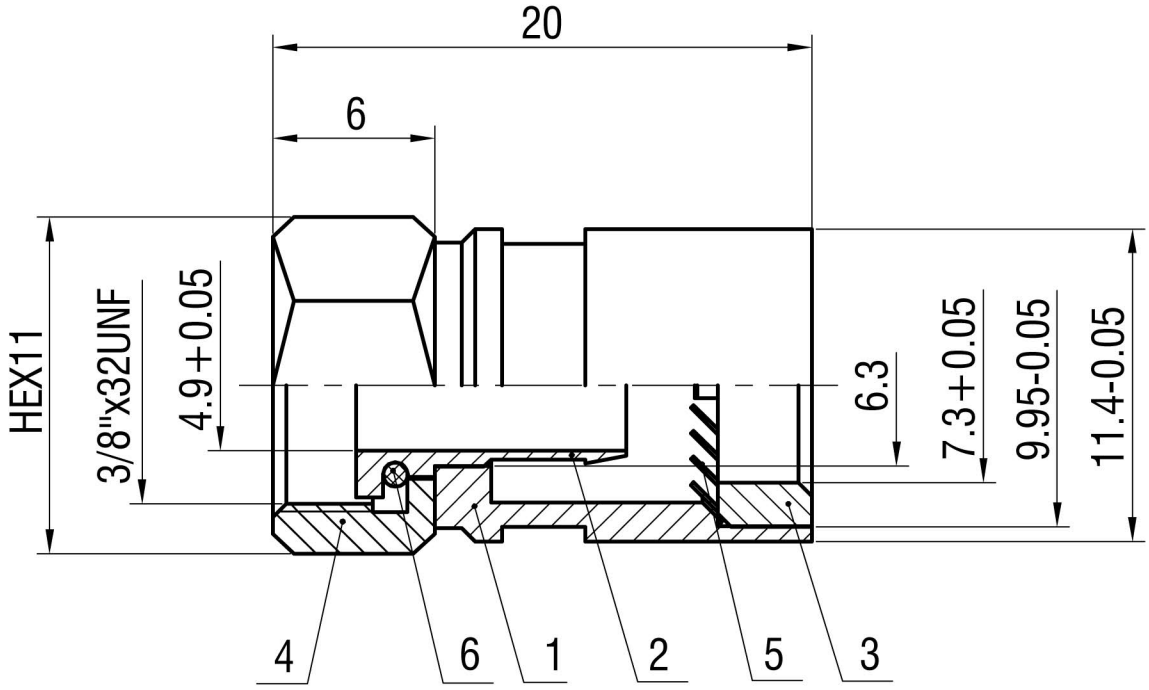

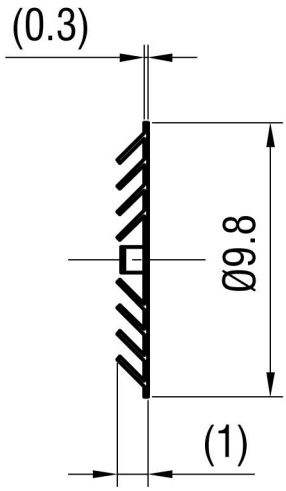

Material listing: (BOM listing)

serial Number	Title	Materials	Number	Plating	Edition	Remark
6	Rubber band	Rubber Ring	1	Black	V1.0	Black
5	Corbeil	Mn	1	nickel	V1.0	
4	Screw cap	Brass	1	nickel	V1.0	
3	Compaction Ring	Brass	1	nickel	V1.0	
2	Connection Ring	Brass	1	nickel	V1.0	
1	DOS shell	Brass	1	nickel	V1.0	

2011-12-09

Registers with	
Old base map number	
Base map number	
Signature	
Date	

mark	num.	Short title	Signature	date
Designer				
Drawer		Chen hiwei		2011.12.09
Checker		John		2011.12.09
approver				

Title

New connector

Match cable: RG6

Code of drawing

JY4-003

Mark	Quantity	Weight (Kg)	Scale
V1.0			

total pages the page